Model 22973C-BSP

Unloader

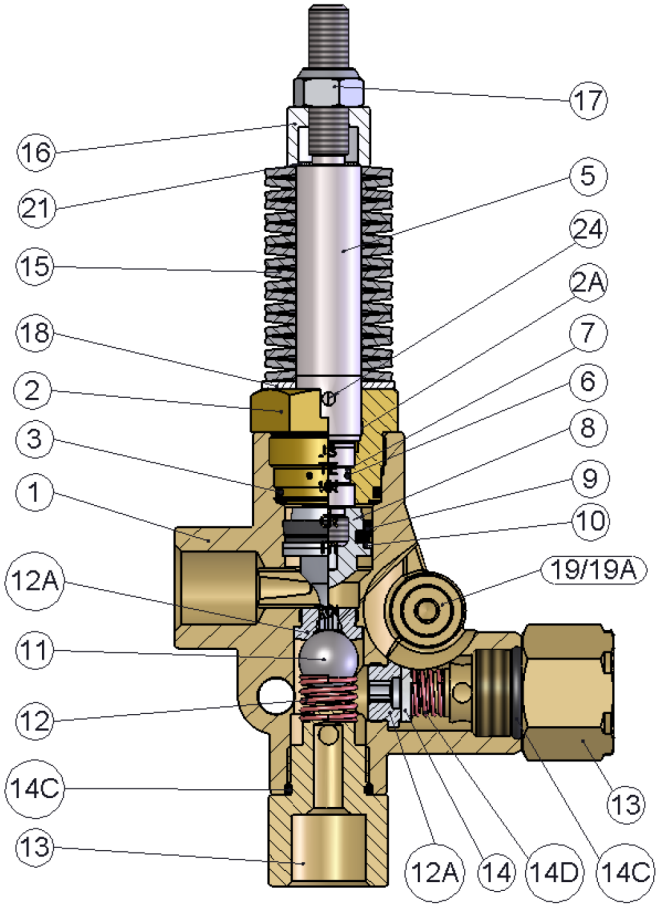

Item	Part #	Description	Qty.
1	12232	Valve Body	1
2	12240	Guide Plug	1
2A+	12241	Guide Ring	1
3+	12057	O-Ring	1
5	12242	Piston Rod	1
6+	12204	O-Ring, Valve Stem	1
7+	12205	Support Ring, Valve Stem	1
8	12206	Piston Body	1
9+	05005	Cup, 28mm	1
10+	05015	Support Ring, 28mm	1
11+	12207	Ball	1
12+	12216	Valve Spring	1
12A+	03402	Seat	2
13	12243-BSP	Fitting	2
14+	12244	Valve Plate	1
14C+	07035	O-Ring	2
14D+	06017-0100	Spring, Outlet Valve	1
15	12220	Spring, Orange	19
16	12245	Spacer Sleeve	1
17	12246	Self-Locking Hexagon Nut	1
18	12223	Washer, Spring	1
19	06685	Plug	4
19A+	12017	O-Ring, Plug	4
21B	06822	Spacer Disc, 1.0 mm	3
24	12247	Serrated Pin	1
	+09461	Repair Kit	

Dimensions - Inches (mm)

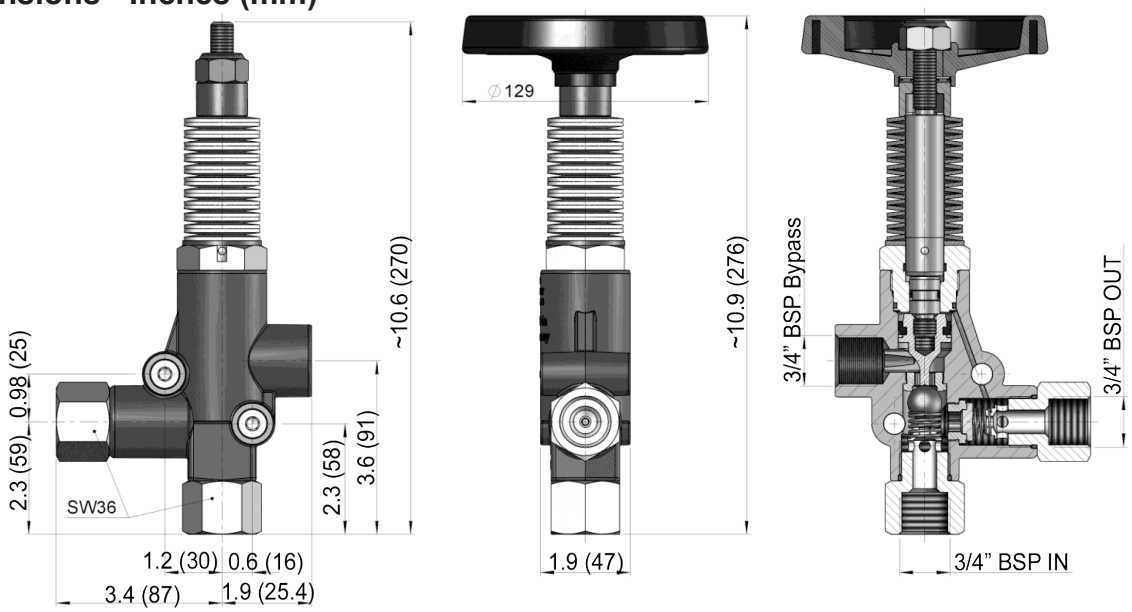

SPECIFICATIONS:

	U.S.	Metric
Pressure Range:	580-4060 PSI	40-280 Bar
Nominal Pressure	5220 PSI	360 Bar
Maximum Flow:	26.4 GPM	(99 LPM)
Minimum Flow:	2.1 GPM	(8 LPM)
Maximum Temp.:	160 °F	(70 °C)
Inlet Port:		3/4" FBSP
Outlet Port:		3/4" FBSP
Bypass:		3/4" BSP

The bypass line must be laid in a flow-favorable way. The cross section of the bypass line must at least correspond to the outlet cross-section of the valve.

Outlet (BSP+NPT)	1/4	1/2	3/4	1
Min. ø (mm)	8	8	15	17

Defect	Cause	Remedy
Valve switches repeatedly when gun is closed	Leaky Gun	Renew gun
	Leaky pressure pipe	Seal pressure pipe
	Leaky sleeve	Renew sleeve
	Worn out kick-back valve body (12A) or valve plate (14)	Renew kick-back valve body or plate. Examine valve seat.
Leaky piston rod	Defective o-ring / support ring	Renew piston rod seals and examine surfaces in guide plug.
Leaky bypass at nominal pressure	Nozzle too small, too much water	Install larger nozzle
	Worn out bypass valve	Examine ball (11) and bypass valve body (12A) and renew as necesarry
Manometer shows high pressure peaks when shutting off gun	Valve set too high above operating pressure	Turn back hexagon nut (17) or handwheel (22).
	Dirty Valve	Clean valve (lime deposits etc.). Grease parts before reinstalling

Safety Instructions

IMPORTANT! Observe direction of flow. The bypass must under no circumstances be closed or fitting with any shut-off device.

IMPORTANT! Continuous bypass operation without releasing the water can cause the liquid to heat up which in turn could damage the unit and endanger persons.

Possible preventive measures:

1. Limit the bypass duration -maximum temperature 160 °F (60 °C); the duration is to be calculated by the operator and in conjunction with the operating conditions.
2. Use fittings (e.g. thermal relief valve on water inlet) to avoid heat increase.

Adjusting Pressure

1. Valve should be tension-free, i.e. loosen nut (17) so that the piston rod can be moved manually.
2. Spring set is to be tensioned by the nut (17) while pump is running with open gun (in case of more guns, all have to be open) until required operating pressure is reached and no more water runs out on bypass side.

If the nozzle holes is suited to the exact flow rate and pump pressure, water should not run via the bypass when required operating pressure is reached. If the nozzle hole is too small to allow all the fluid to run through the hole after the required operating pressure has been reached, on no account is the valve to be adjusted higher than the maximum operating pressure of the pump. In this case, the bypass is to be left partially open. It is therefore advisable to have suitable nozzles installed. The spacer discs (21A, 21B) which are under the spacer sleeve (16) are there to keep the adjusted pressure within limits. These discs are not to be removed.

⚠ Service and Adjustment

Reserving and adjusting work is only to be carried out by skilled tradesmen.

Renewal of Piston Seals

Remove guide plug (2) out of vlave body and piston body (8). Remove guide plug from the piston rod (5).
Cut out worn seals. Carefully slide o-ring (6) and support ring (7) onto piston rod. Note order of installation.
Clip sleeve support ring (10) and cup (9) onto piston body. Check valve body surfaces and guide plugs (dirt or damage wears out seals quickly). Fasten piston body onto piston rod with Loctite 270. Grease all parts lightly with Silicone before reinstalling.

To Check Valves

Kick-Black Valve: Remove plug (13) on the outlet side and check whether valve plate (14) and valve seat (12A) are worn out. Check o-ring (14C) for damage.
Inlet Valve: Remove plug (13) on the inlet side; check ball (11) and seat (12A) for damage. Valve seats can be screwed out with an inside allen head wrench.
IMPORTANT! If the seat (12A) is worn, the ball (11) must be carefully impressed against the sealing edges of the seat. Glue in new valve seats with Loctite 270. Allow to dry for 60 minutes before putting into operation.

GIANT
Performance Under Pressure
© Copyright 2022 Giant Industries, Inc.

Giant Industries, Inc.
900 N. Westwood Ave.
Toledo, Ohio 43607
PHONE (419) 531-4600
FAX (419) 531-6836
www.giantpumps.com

⚠ **WARNING:** This product might contain a chemical known to the State of California to cause cancer, and birth defects or other reproductive harm. For more information go to: www.P65Warnings.ca.gov