GIANT
Performance Under Pressure

KAMAT

# K55000-5G Triplex Plunger Pump

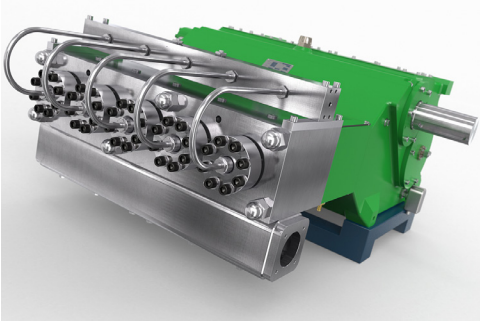

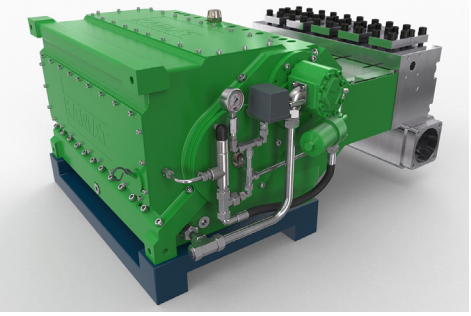

| Rated Speed 450 RPM | | | Pressure at specific power inputs | | | | | | | | Pump Head Style | | |
|---|---|---|---|---|---|---|---|---|---|---|---|---|---|
| **Type** | **FLOW** | | **536 Hp** | **400 kW** | **604 Hp** | **450 kW** | **671 Hp** | **500 kW** | **738 Hp** | **550 kW** | **A** | **M** | **M2** |
| | **GPM** | **L/min** | **PSI** | **Bar** | **Hp** | **kW** | **Hp** | **kW** | **Hp** | **kW** | | | |
| 55018 | 18.2 | 69 | 44745 | 3085 | 50401 | 3475 | 50764 | 3500 | ------- | ------- | 1 | | |
| 55020 | 22.5 | 85 | 36260 | 2500 | 40829 | 2815 | 45325 | 3125 | 49894 | 3440 | 1 | | |
| 55022 | 27.2 | 103 | 29951 | 2065 | 33722 | 2325 | 37493 | 2585 | 41191 | 2840 | 1 | | |
| 55024 | 32.2 | 122 | 25164 | 1735 | 28355 | 1955 | 31474 | 2170 | 34665 | 2390 | 1 | | |
| 55026 | 37.8 | 143 | 21466 | 1480 | 24149 | 1665 | 26832 | 1850 | 29516 | 2035 | 1 | | |
| 55028 | 43.9 | 166 | 18493 | 1275 | 20813 | 1435 | 23134 | 1595 | 25455 | 1755 | 1 | | |
| 55030 | 50.5 | 191 | 16099 | 1110 | 18130 | 1250 | 20161 | 1390 | 22191 | 1530 | 2 | | |
| 55032 | 57.3 | 217 | 14141 | 975 | 15954 | 1100 | 17695 | 1220 | 19508 | 1345 | 2 | | |
| 55036 | 72.7 | 275 | 11168 | 770 | 12618 | 870 | 13996 | 965 | 15374 | 1060 | 2 | | |
| 55040 | 89.6 | 339 | 9065 | 625 | 10225 | 705 | 11313 | 780 | 12473 | 860 | 2 | 1 | |
| 55045 | 113.3 | 429 | 7179 | 495 | 8050 | 555 | 8920 | 615 | 9863 | 680 | 2 | 1 | |
| 55050 | 140.0 | 530 | 5802 | 400 | 6527 | 450 | 7252 | 500 | 7977 | 550 | 2 | 1 | |
| 55055 | 169.3 | 641 | 4786 | 330 | 5366 | 370 | 6019 | 415 | 6599 | 455 | | 1 | |
| 55060 | 201.6 | 763 | 4061 | 280 | 4569 | 315 | 5004 | 345 | 5512 | 380 | | 1 | |
| 55065 | 236.4 | 895 | 3408 | 235 | 3844 | 265 | 4279 | 295 | 4714 | 325 | | 1 | |
| 55070 | 274.5 | 1039 | 2973 | 205 | 3336 | 230 | 3699 | 255 | 4061 | 280 | | | 1 |
| 55075 | 314.9 | 1192 | 2611 | 180 | 2901 | 200 | 3191 | 220 | 3553 | 245 | | | 1 |
| 55085 | 404.5 | 1531 | 2031 | 140 | 2248 | 155 | 2538 | 175 | 2756 | 190 | | | 1 |
| 55090 | 453.6 | 1717 | 1813 | 125 | 2031 | 140 | 2248 | 155 | 2466 | 170 | | | 1 |
| 55095 | 505.4 | 1913 | 1595 | 110 | 1813 | 125 | 2031 | 140 | 2176 | 150 | | | 1 |

=Ultra High Pressure

- Flow rate is based on 100% volumetric efficiency and $68^0$ F ($20^0$ C) ambient temperature.
- Depending on fluid medium, a minimum inlet pressure is required.
- Depending on rod loading, speed range = 10-100%.
- Gear dynamically balanced
- Gear with force-fed lubrication with oil cooler.
- Standard Gear Ratios: i = 3.30, 3.95, 4.66 and 5.63
- Weight: 4850 lbs (2200 kg)
- API 674 specifications and vertical operation available upon request.
- Contact your local distributor or Giant Industries for use with special mediums. i.e. seawater, glycol, methanol, oil, etc.

**WARNING:** This product might contain a chemical known to the State of California to cause cancer, and birth defects or other reproductive harm.
For more information go to www.P65Warnings.ca.gov

# K55000-5G Triplex Plunger Pump

## Pump Dimensions - mm(in)

Type A1

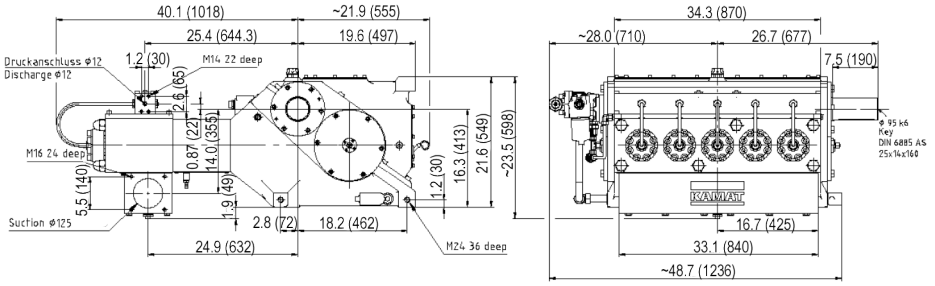


Type A2

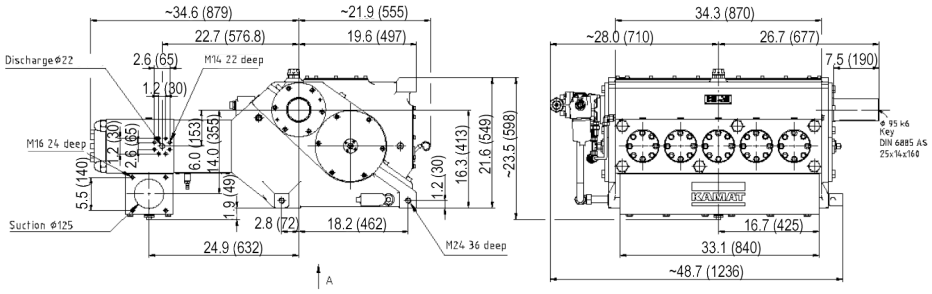


Type M1

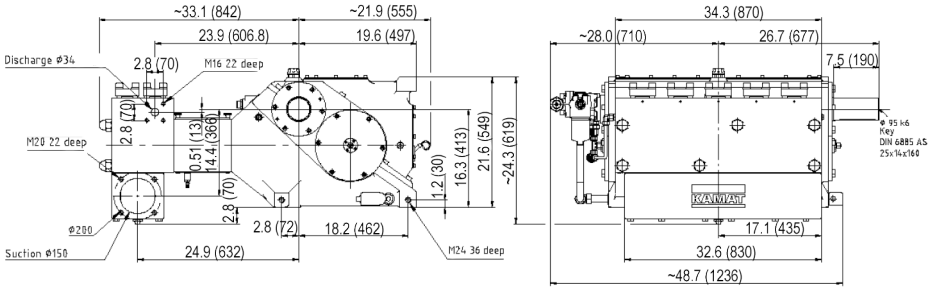


Type M21

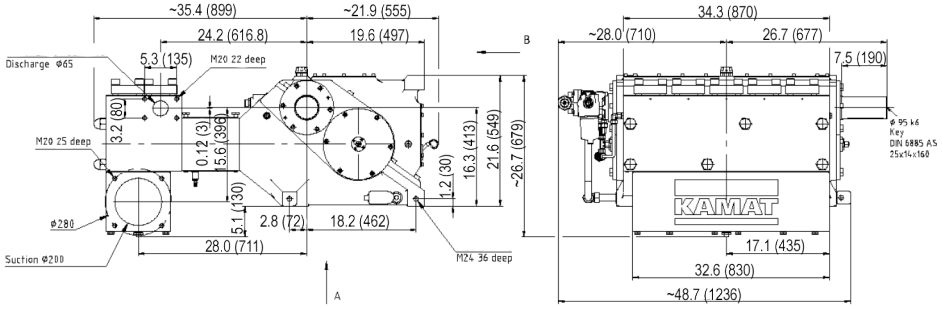


Type A1
≥ 21,755 PSI
(1500 bar)

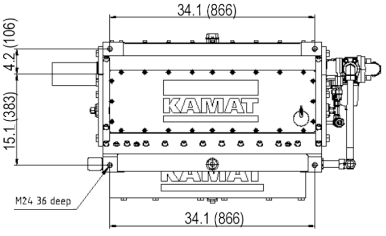


Footprint

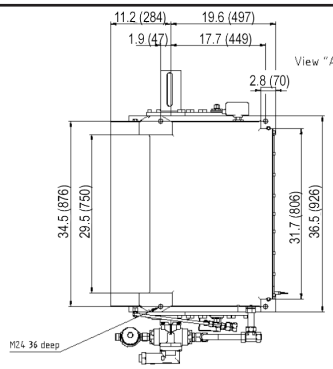



**GIANT INDUSTRIES, INC.**
900 N. Westwood Ave. Toledo, Ohio 43607
Phone: (419) 531-4600 Fax: (419) 531-6836
www.giantpumps.com


© Copyright 2021 Giant Industries, Inc.