Models GP8135, GP8135A, GP8140 & GP8140A

Triplex Ceramic Plunger Pump Operating Instructions Repair and Service Manual

"A" version = NPT inlet and discharge ports

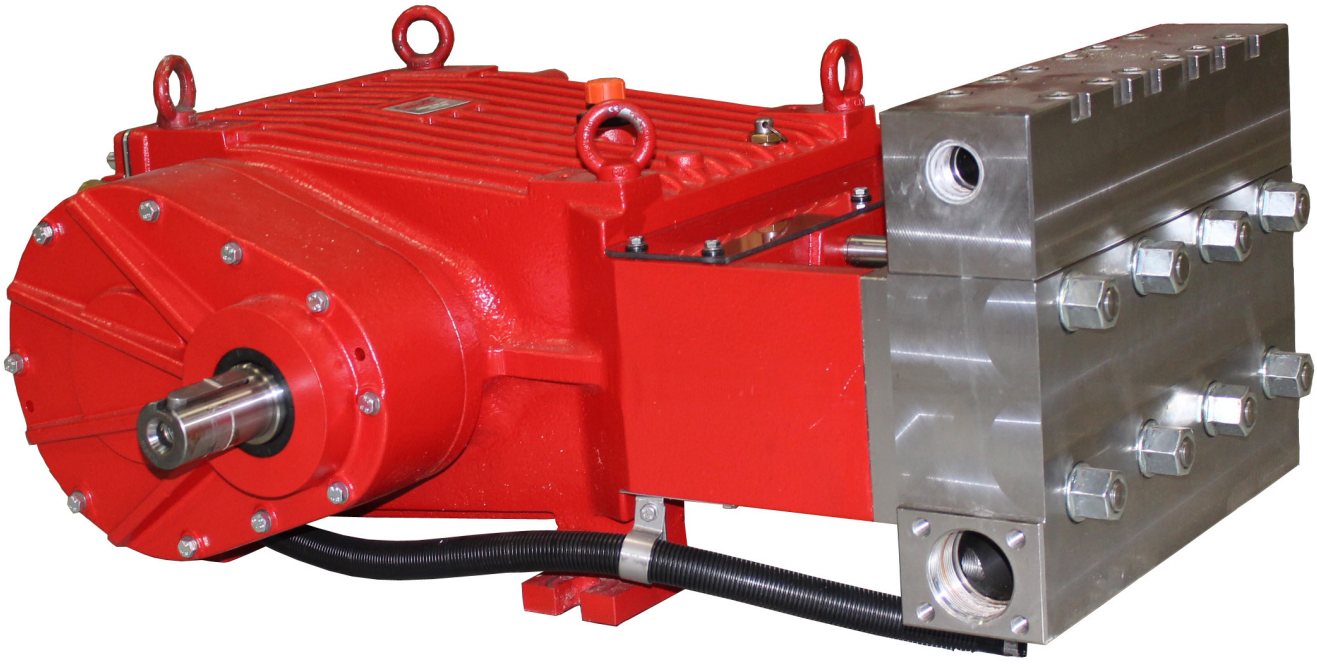

GIANT
Performance Under Pressure

Updated 12/23

Contents:

Installation/Operating Instructions:	pages 2-3
Pump Specifications:	pages 4-5
Exploded View:	page 6
Parts List:	page 7
Repair Kits:	page 8
Tool List/Torque Specifications:	page 8
Troubleshooting:	page 8
Repair Instructions:	pages 9-10
Dimensions:	page 11
Warranty Information:	back page

INSTALLATION INSTRUCTIONS

The stated figures are for maximum pressure and maximum. speed (rpm) and apply for interval operation with cold water.
Required NPSH refers to water (specific weight 0.062 lbs/ft^3 - 1kg/dm^3, viscosity 1° E) at maximum permissible pump revolutions.
Fluid medium: Clean water filtered to 50 microns. For higher water temperatures, use a separate crankcase cooling system, for details contact Giant Industries.

Operation and Maintenance
Check oil level prior to starting and ensure trouble free-water supply.

Important! If there is a **danger of frost**, the water in the pump and in the pump fittings (particularly the unloader valve) must me emptied. The second discharge port can also be used and the pump run “dry” for 1-2 minutes for this purpose.

The following oils may be used: 85-90W Industrial Gear Lube oil (Giant’s p/n 01154), or ISO VG 220 GL4 (e.g. Aral Degol BG220) or SAE 90 GL4 gear oil. Use 4.2 gallons (16 liters of one of the above oils). Initial change after 50 operating hours and then every 1000 operating hours after one year latest.

Important! When operating in damp places or with high temperature fluctuations condensate (frothy oil) might appear in the gearbox. The oil must be changed immediately.

NPSH values must be observed.

Cooling the Gear Oil

Important! When using the integrated system for cooling the gear oil (standard version), the water input pressure must not exceed 29 PSI (2 bar) .

If a **separate** cooling circuit (maximum 29 PSI - 2 bar) is installed, it is then possible to have an input pressure of up to maximum 145 PSI (10 bar) on the **suction side** of the pump.

Make sure that suction pulsation is sufficiently dampened; water column resonance must be avoided.

Important! The pumps can be run without gear oil cooling in continuous operation **up to** a power rating of **94 Hp (70 kW)** or with very intermittent operation (at full performance). If operational power **exceeds 94 Hp (70 kW)** or if continuous operation is the case, the pump must be run with the integrated oil cooling system. The maximum temperature of the water being pumped and which is also fed through the cooling system must not exceed 86 °F (30 °C). The water amount which is fed into the cooling system depends on the pump speed and is approximately 1.8 GPM (7.0 l/min.) at 580 pump rpm. The cooling water is sucked in by one of the pumping chambers and pumped away.

Definition of intermittent operation: operation at full performance for not more than 20 minutes per hour (total time). This means the pump can run with no pressure or it is completely stopped. For example, this can be full load operation for 5 minutes four times an hour with 10 minute breaks in between or continuous full load operation for 20 minutes followed by a 40 minute break.

Important! If higher medium temperatures or liquids other than water are involved or aggressive media such as seawater, demineralized water, etc., the pump must be fitted with a separate cooling circuit. The separate cooler must have a cooling efficiency of 1700 watts. If there is a danger of frost, an appropriate amount of antifreeze must be mixed into the cooling circuit.

When starting up for work, the pump must run first at zero pressure for approximately 1 minute.

Important! The GP8135/GP8140 pumps have a black arrow on the reduction gear, which shows the preferred direction of rotation. The pumps can be delivered either with the gear on the left side or the right side, which eases the planning of assembling units with regard to rotational direction.

Gear on left side (from the front of the pump) = optimal rotation: to the left (counterclockwise)

Gear on the right side (from the front of the pump) = optimal rotation to the right (clockwise)

The preferred/optimal direction of rotation ensures the motion of the connecting rods correctly slings the oil onto the crosshead guides. Where continuous operation is involved, this is a particular advantage.

The pump can also be run against the recommended direction of rotation if operated periodically or at reduced pressure. If so, the pump has to be run in this direction to smoothen the bearing areas. This is done by a one-time

operation at zero pressure for at least 30 minutes; thereafter the pressure must be slowly increased over the next hour to the desired maximum operating pressure; the pump is then run in. Check the oil temperature during this process.

Important! The pump and cooling system must be emptied if there is a danger of frost. Travel wind can cause water in pumps fitted on open vehicles to freeze even if the outside temperature is above freezing point.
To empty the cooling circuit, remove the joints (K11/K15) on the pump head (50). Blow out the circuit liquid at the joint connection (K11/K7) using compressed air.

The torque tension on the valve casing nuts (49A) should be checked after approximately 200 hours. Please see the section “Torque Specifications” on page 8.
When checking the torque tension, the pump must be at zero pressure.

Important! The service life of the seals is maximized if a minimal amount of leakage is present. A few drops of water can drip from each plunger every minute. Leakage has to be examined every day; the plunger seals must be changed should leakage become excessive (i.e. constant dripping).

⚠ Safety Rules

Before performing any work on the pump or complete assembled unit, the operating instructions must be read and followed. Giant will not bear responsiblity for damage to materials or persons caused by improper handling of our pumps.

For unauthorized personnel, access to the pump is not allowed. A safety valve is to be installed in accordance with the guidelines for liquid spraying units so that the admissible operating pressure cannot be exceeded by more than 10%. Pump operation without a safety valve as well as any excess in temperature or speed limits automatically voids the warranty.

When the pump is in operation, a protective guard must cover the driven shaft side and its coupling. The plunger area must also be cover by the protective plate (30).

Do not step onto the protective plate (30) nor put weight on it.

Pressure in the discharge line and pump must be at zero before carrying out any maintenance work to the pump or unit. Close off suction line. Disconnect fuses to ensure that the driving motor cannot get switched on accidentally. Make sure that the pump, the cooling system and all parts on the pressure side of the unit are vented and refilled, with pressure at zero, before starting the pump.

In order to prevent air or an air/water-mixture being absorbed and cavitation occurring, the pump-npshr, positive suction head and water temperature must be respected.

Cavitation and/or compression of gases lead to uncontrollable pressure-kicks, which can ruin the pump and unit parts and also be dangerous to the operator or anyone standing nearby.

Giant plunger pumps are suitable for pumping clean water and other non-aggressive or nonabrasive media with a specific weight similar to water.

Before pumping other liquids-especially inflammable, explosive and toxic media-the pump manufacturer must be consulted with regard to the resistance of the pump material. It is the responsibility of the equipment manufacturer and/or operator to ensure that all pertinent safety regulations are adhered to.

Specifications
Model GP8135/GP8135A

	U.S.	(Metric)
Flow	29.1 GPM	(110 LPM)
Discharge Pressure	7250 PSI	(500 bar)
Power Consumption	142 BHP	106 kW
Maximum Crankshaft Speed		Up to 580 RPM
Inlet Pressure	Up to 29 PSI	(2.0 bar)*
Plunger Diameter	1.38”	35 mm
Plunger Stroke	2.83”	72 mm
Pinion Shaft Diameter	1.77”	45 mm
Fitting Key		14 mm x 70 mm
Crankshaft Mounting		Either side
Pinion Shaft Rotation		Towards Gear End of pump
Temperature of Pumped Fluids	Up to 86 °F	(30 °C)**
Inlet Ports		(2) 2” BSP (NPT for GP8135A)
Discharge Ports		(2) 1” BSP (NPT for GP8135A)
Weight	800 lbs.	(363 kg)
Crankcase Oil Capacity	4.2 Gal.	(16.0 liters)
Fluid End Material		Stainless Steel
NPSHR	27.9 ft. - head	8.5 mWs

(The specifications above are based on maximum pressure and maximum RPM for intermittant duty using cold water.)

Based on driver type, input speeds may vary.

* If a separate cooling circuit is installed, the maximum inlet pressure would be 145 PSI (10 Bar).

** If higher temperatures are needed, use a separate cooling circuit. Consult factory.

Consult the factory for special requirements that must be met if the pump is to operate beyond one or more of the limits specified above.

GP8135 HORSEPOWER REQUIREMENTS

RPM	GPM	1000 PSI	2500 PSI	5000 PSI	7250 PSI
300	15.1	10.4	26.0	52.1	75.5
400	20.1	13.9	34.7	69.3	100.5
500	25.1	17.3	43.3	86.6	125.5
580	29.1	20.1	50.2	100.3	145.5

GP8135 Gear Ratios

Gear Ratio	Input Speed
2.6:1	1500 RPM
3.1:1	1800 RPM
3.8:1	2200 RPM
4.5:1	2600 RPM

HORSEPOWER RATINGS:

The rating shown are the power requirements for the pump. Gas engine power outputs must be approximately twice the pump power requirements shown above.

We recommend a 1.15 service factor be specified when selecting an electric motor as the power source.

To compute specific pump horsepower requirements, use the following formula:

$$\frac{\text{GPM X PSI}}{1450} = \text{HP}$$

SPECIAL NOTE:

The theoretical gallons per revolution (gal/rev) is 0.050.

To find specific outputs at various RPM, use the formula:

GPM = 0.050 x RPM

Specifications
Model GP8140/GP8140A

	U.S.	(Metric)
Flow	39.6 GPM	(150 LPM)
Discharge Pressure	5510 PSI	(380 bar)
Maximum Crankshaft Speed		580 RPM
Power Consumption	146 BHP	109 kW
Inlet Pressure	Up to 29 PSI	(2.0 bar)*
Plunger Diameter	1.57”	40 mm
Plunger Stroke	2.83”	72 mm
Pinion Shaft Diameter	1.77”	45 mm
Fitting Key		14 mm x 70 mm
Crankshaft Mounting		Either side
Pinion Shaft Rotation		Towards Gear End of pump
Temperature of Pumped Fluids	Up to 86 °F	(30 °C)**
Inlet Ports		(2) 2” BSP (NPT for GP8140A)
Discharge Ports		(2) 1” BSP (NPT for GP8140A)
Weight	800 lbs.	(363 kg)
Crankcase Oil Capacity	4.2 Gal.	(16.0 liters)
Fluid End Material		Stainless Steel
NPSHR	24.6 ft.-head	7.5 mWs

(The specifications above are based on maximum pressure and maximum RPM for intermittant duty using cold water.)

Based on driver type, input speeds may vary.

* If a separate cooling circuit is installed, the maximum inlet pressure would be 145 PSI (10 Bar).

** If higher temperatures are needed, use a separate cooling circuit. Consult factory.

Consult the factory for special requirements that must be met if the pump is to operate beyond one or more of the limits specified above.

GP8140 HORSEPOWER REQUIREMENTS

RPM	GPM	1000 PSI	2500 PSI	3500 PSI	5510 PSI
300	20.5	14.1	35.3	49.5	77.9
400	27.3	18.8	47.1	65.9	103.7
500	34.1	23.5	58.8	82.3	129.6
580	39.6	27.3	68.3	95.6	150.5

GP8140 Gear Ratios

Gear Ratio	Input Speed
2.6:1	1500 RPM
3.1:1	1800 RPM
3.8:1	2200 RPM
4.5:1	2600 RPM

HORSEPOWER RATINGS:

The rating shown are the power requirements for the pump. Gas engine power outputs must be approximately twice the pump power requirements shown above.

We recommend a 1.15 service factor be specified when selecting an electric motor as the power source.

To compute specific pump horsepower requirements, use the following formula:

$$\frac{\text{GPM X PSI}}{1450} = \text{HP}$$

SPECIAL NOTE:

The theoretical gallons per revolution (gal/rev) is 0.068.

To find specific outputs at various RPM, use the formula:

GPM = 0.068 x RPM

EXPLODED VIEW - GP8135 & GP8140

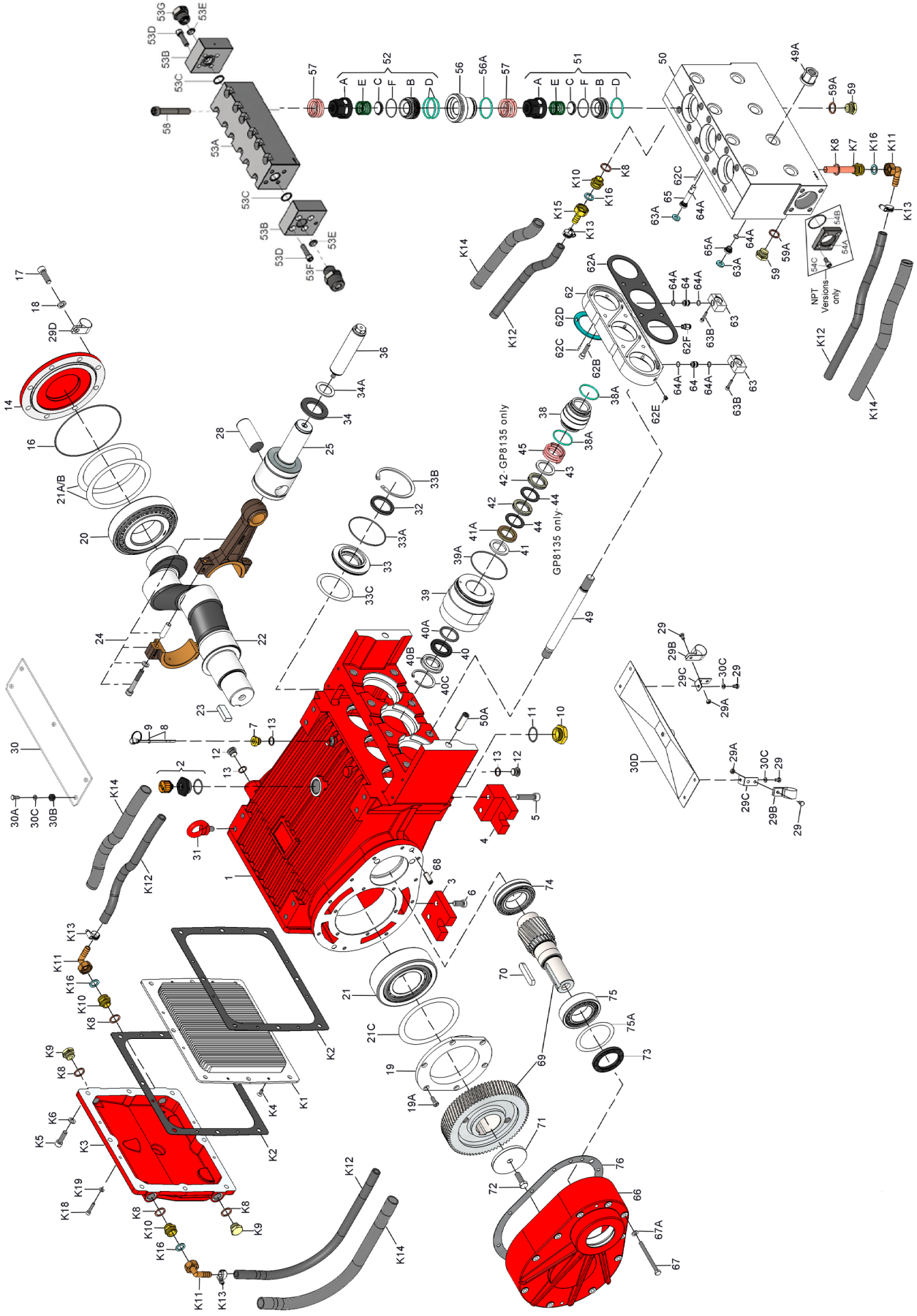

Parts List - GP8135 and GP8140

Item	Part	Description	Qty
1	05651	Crankcase	1
2	06893	Oil Filler Plug Assy with Vent	1
3	05652	Rear Foot for Crankcase	2
4	05653	Front Foot for Crankcase	2
5	05654	Hexagon Socket Screw	4
6	05655	Hexagon Socket Screw	4
7	05656	Plug 3/8” BSP for Oil Dipstick	1
8	04185	Oil Dipstick Assembly	1
9	01009	O-Ring	1
10	05657	Plug M33 X 1.5	1
11	07102	O-Ring	1
12	12256	Plug 3/8” BSP	3
13	22929	Copper Washer	4
14	05036	Bearing Cover Closed	1
16	05037	O-Ring	1
17	05038	Hexagon Socket Screw M12	8
18	05039	Spring Ring	8
19	05765	Flange	1
19A	05766	Hexagon Socket Screw	6
20	05658	Tapered Roller Bearing	1
21	05659	Tapered Roller Bearing	1
21A	05042	Fitting Disc	1-3
21B	05043	Fitting Disc	1-3
21C	05113	Fitting Disc	1-3
22	05741	Crankshaft	1
23	05661	Fitting Key	1
24	05047	Connecting Rod Assembly	3
25	05048	Crosshead with Plunger Base	3
28	05049	Crosshead Pin	3
29	05051	Hexagon Screw	6
29A	07408	Hexagon Nut	2
29B	05383	Bracket 2 for Cooling Hose	2
29C	05662	Support Clamp	2
29D	05381	Bracket 1 for Cooling Hose	1
30	05052	Cover Plate	1
30A	07225-0100	Hexagon Screw	5
30B	13136	Grommet	5
30C	08280	Washer	9
30D	05050	Splash Cover	1
31	07623	Eye Bolt	4
32	05058	Radial Shaft Seal	3
32A	03118	Oil Scraper	3
33	03119	Seal Retainer	3
33A	05056	O-Ring	3
33B	05054	Clip Ring	3
33C	05059	Fitting Disc	3
34	05060	Oil Shield	3
34A	05830	Locking Disc	3
36	05743	Plunger Pipe, GP8135	3
36	05816	Plunger Pipe, GP8140	3
38	05831	Seal Case, GP8135	3
38	05817	Seal Case, GP8140	3
38A	05408	O-Ring, GP8135	6
38A	05818	O-Ring, GP8140	6
39	05832	Seal Sleeve, GP8135	3
39	05819	Seal Sleeve, GP8140	3
39A	05617	O-Ring	3
40	05744	Sleeve, GP8135	3
40	05820	Sleeve, GP8140	3
40A	05745	O-Ring, GP8135	3
40A	05821	O-Ring, GP8140	3
40B	05746	Pressure Ring, GP8135	3
40B	05822	Pressure Ring, GP8140	3
40C	05474	Clip Ring, GP8135	3
40C	13217-0100	Clip Ring, GP8140	3
41	05833	Pressure Ring, GP8135	3
41	05823	Pressure Ring, GP8140	3
41A	05747	Guide Ring, GP8135	3
41A	03559	Guide Ring, GP8140	3
42	05748	Rope Packing, GP8135	6
42	05825	Rope Packing, GP8140	3
43	05749	Support Disc, GP8135	3
43	05826	Support Disc, GP8140	3
44	05751	Support Ring, GP8135	6
44	05827	Support Ring, GP8140	3
45	13297	Tension Spring, GP8135	3
45	05828	Tension Spring, GP8140	3
49	05834	Stud Bolt	8
49A	05073	Hexagon Nut	8
50	05835	Inlet Valve Casing	1
50A	13162	Centering Stud	2
51	05837	Inlet Valve Assembly	3
51A	05595	Spring Tension Cap	3
51B	05838	Inlet Valve Seat	3
51C	05752	Valve Plate	3
51D	05408	O-Ring	3
51E	05450	Valve Spring	3
51F	05596	O-Ring	3
52	05839	Discharge Valve Assembly	3
52A	05595	Spring Tension Cap	3
52B	05840	Discharge Valve Seat	3
52C	05752	Valve Plate	3
52D	05408	O-Ring	6
52E	05450	Valve Spring	3
52F	05596	O-Ring	3
53A	03585	Discharge Casing	1
53B	03586	Connection Plate	2
53C	07704	Copper Seal	2
53D	03587	Hexagon Socket Screw	8
53E	03588	Lens Gasket	2
53F	03589	Connection Nipple, 1” (MNPT versions)	1
53F	03589-BSP	Connection Nipple, 1” (MBSP versions)	1
53G	03590	Plug, 1” BSP	1
54A	03591	Adapter, 2” (FNPT versions)	1
54B	13286	O-Ring (NPT versions)	1
54C	03592	Hexagon Socket Screw (NPT versions)	4
56	05409	Discharge Valve Adaptor	3
56A	05408	O-Ring	3
57	07173	Tension Spring	6
58	05753	Inner Hexagon Screw	12
59	07109	Plug, 1/2” BSP	2
59A	06272	Copper Seal, 1/2” BSP	2
61	05841	Plug, 2” BSP	1
62	05842	Intermediate Casing	1
62A	05843	Flat Seal	1
62B	05754	Hexagon Socket Screw	4
62C	22764	Serrated Pin	4
62D	05844	Flat Leakage Seal	3
62E	06106	Allen Grub Screw	2
62F	04583	Connector	1
63	05845	Drip Return Joint	2
63A	05757	Leakage Seal	2
63B	05811	Hexagon Socket Screw	4
64	05846	Drip Return Nipple	2
64A	11507-0001	O-Ring	6
65	05847	Drip Return Connection	1
65A	05848	Drip Return Plug	1
66	05663	Gear Cover	1
67	05664	Hexagon Screw	10
67A	05341	Washer	10
68	05665	Cylinder Pin	2
69	04171	Gearwheel Set (1500 RPM=2.6)	1
69	04170	Gearwheel Set (1800 RPM=3.1)	1
69	05767	Gearwheel Set (2200 RPM=3.8)	1
69	05666	Gearwheel Set (2600 RPM=4.5)	1
70	07614	Fitting Key	1
71	04571	Fitting Disc	1
72	05667	Hexagon Screw	1
73	05608	Shaft Seal Ring for Gear	1
74	05815	Roller Bearing	1
75	05669	Roller Bearing	1
75A	05670	Fitting Disc	1
76	05432	Gear Seal	1
78	05849	Oil Cooler (Items K1 - K19)	1
K1	05026	Cooling Vane Plate	1
K2	05027	Seal for Gear Cover	2
K3	05028	Gear Cover	1
K4	05029	Hexagon Head Countersunk Screw	4
K5	07381	Hexagon Socket Screw	8
K6	08041	Washer	8
K7	05742	Connecting Branch	1
K8	06272	Copper Seal	6
K9	07109	Plug, 1/2” BSP	2
K10	05031	Connecting Branch	3
K11	05032	U-Joint Connector c/w Nut	3
K12	05033	Tube for Cooler	2
K13	05402	Hose Clamp	4
K14	05403	Hose Guard	2
K15	05404	Hose Coupling Nut	1
K16	05405	Flat Gasket	4
K18	04158	Hexagon Set Screw	4
K19	05053	Washer	4
	04175	Plunger Replacement Kit, GP8135 (34A-45)	
	04160	Plunger Replacement Kit, GP8140 (34A-45)	

Pump Repair Kits - GP8135 and GP8140

Plunger Packing Kit - GP8135 - # 09707

Item	Part #	Description	Qty.
38A	05408	O-Ring	6
39A	05617	O-Ring	3
40	05744	Sleeve	3
40A	05745	O-Ring	3
41A	05747	Guide Ring	3
42	05748	Rope Packing	6
44	05751	Support Ring	6

Plunger Packing Kit - GP8140 - # 09708

Item	Part #	Description	Qty.
38A	05818	O-Ring	6
39A	05617	O-Ring	3
40	05820	Sleeve	3
40A	05821	O-Ring	3
41A	03559	Guide Ring	3
42	05825	Rope Packing	3
44	05827	Support Ring	3

Inlet Valve Kit - #09709

Item	Part #	Description	Qty.
51	05837	Inlet Valve Assembly	3
56A	05408	O-Ring	3

Discharge Valve Kit - #09710

Item	Part #	Description	Qty.
52	05839	Discharge Valve Assembly	3
56A	05408	O-Ring	3

Oil Seal Kit - #09584

Item	Part #	Description	Qty.
32	05058	Radial Shaft Seal	3
32A	03118	Oil Scraper	3
33A	05056	O-Ring	3

GP8135(A) & GP8140(A) TORQUE SPECIFICATIONS

Position	Item #	Tool Needed	Description	Lubrication Info	Torque Amount
17	05038	10mm Allen Wrench	Hexagon Socket Screw		64 ft.-lbs. (87 Nm)
24	05047	8mm Allen Wrench	Connecting Rod Assembly		37 ft.-lbs. (50 Nm)
33B	05054	Industrial Snap Ring Pliers	Clip Ring		
36	05743/05816	16mm Socket	Plunger Pipe		33 ft.-lbs. (45 Nm)
49A	05073	30mm Socket	Hexagon Nut		266 ft.-lbs. (360 Nm)
51/52	05837/05839	Valve Puller - p/n 07662	Valve Assemblies		
58	05753	12mm Allen Wrench	Hexagon Socket Screw	Anti-Seize 350	132 ft.-lbs. (180 Nm)
K5	07381	8mm Alen Wrench	Hexagon Socket Screw		

GP8000 Troubleshooting

Problem	Cause	Solution
Pressure drops, water leaks	V-sleeves leak	Replace V-sleeves, examine surface of plunger
Pressure drops, pump becomes loud	Discharge or suction valve leaks	Replace valve
	Steam formation (cavitation)	Reduce suction height, reduce flow resistance in inlet line, clean inlet filter, lower water temperature
Irregular pressure	Worn valves	Examine valves
	O-Ring on the valves or inlet valve adapter leaks	Examine O-ring, examine valve casing for unevenness on the sealing surfaces
Oil leaks at visible part of plunger	Gear sealing is leaky	Examine seals and running surface of plunger
Dirty mile-colored frothy oil	Oil has mixed with water	Replace oil immediately, find and fix the cause
Oil leakage on the crankshaft	Shaft seal ring leaks	Check seal and shaft
Noise increases without loss of pressure	Worn bearing	Dismantle gear, examine all parts, replace worn parts, check oil level. If service life was too short, check for excess strain or whether lubrication intervals were too long. Only specified lubricants are to be used

GP8135 and GP8140 Pump Repair Instructions

To Check Valves

Loosen screws (58) and lift discharge casing (53A) up and away. Take out pressure springs (57). Pull out assembled valves (51 and 52) with fitting tool (p/n 07662).
Dismantling valves: the spring tension cap (51A, 52A) is screwed together with the valve seat (51B/52B). Take out springs (51E/52E) and valve plate (51C/52C). Check sealing surfaces and O-rings (51D/F, 52D/F, 56A).
Replace worn parts.
When reassembling, coat threads of valve seat with silicon grease or molycote anti-seize Cu-7439. Before refitting the valves, clean the sealing surfaces in the inlet valve casing (50) and check for any damage. Tighten screws (58) at 132 Ft-lbs (180 NM); check torque tension after 8-10 operating hours.

To Check Seals and Plunger Pipe

Remove hexagon nuts (49A) and hose coupling (K11 and K15). Remove inlet valve casing (50) together with seal case (38) and intermediate casing (62) from crankcase (1). If necessary, carefully tap the inlet valve casing (50) past the centering stud (50A) using a rubber hammer.

Important! If necessary, support the pump head by resting it on wooden blocks or by using a pulley.

Take off flat leakage seal (62D) and check to make sure that it is not torn or damaged.

Remove plunger (36) from crosshead with plunger base (25) and take seal sleeve (39) together with all mounted parts out of the drive.
Pull plunger out of seal assembly and check for any damage. Clean centering and top-surface of crosshead with plunger base (25). Take out tension spring (45). Carefully remove the whole seal unit (41-44) by using socket wrench or the backside of a screwdriver. Check plunger surface and seals. Check O-rings (39). Renew damaged parts.
After removing clip-ring (40C) and pressure ring (40B), check leakage seal (40) and O-ring (40A) . If necessary, replace worn parts.

Important! Be careful not to damage seal sleeve (39), pressure ring (41) and guide ring (41A). Check the inner diameter of the pressure ring and guide ring for wear and, if necessary, replace together with seals (42) and support ring (44). Clean all parts. Before installation, new parts should be lightly coated with silicon grease.

Insert the seal unit (41-45) into the seal sleeve (39). Carefully push the plunger (36) through the seals (from the crankcase side). If necessary, the seals can be held tightly using a suitable pipe support held on the opposite side of the seal sleeve.
Take out the seal case (38) from the intermediate casing (62) and check O-rings (38A). If necessary, secure 2 screwdrivers in the front O-ring groove to extract seal casing from intermediate casing. Before installing, coat O-rings with silicon grease.

Important! Mounting surfaces of the crankcase, seal sleeves, intermediate casing and valve casing must be clean and free of damage. The components must fit exactly and evenly on one another. The same exactness applies for all centering positions in the crankcase, intermediate casing, pressure-and valve casing.

Coat the seal sleeve lightly with anticorrosive grease (e.g. molycote no. Cu-7439) in its fitted area towards the crankcase. Insert seal sleeves in to their crankcase fittings.

Important! Watch the even milled surfaces on the seal sleeves. They must be positioned vertically on each other.

Turn the pump (by hand) until the plunger base (25) rests against the plunger (36). Tighten plunger (36) to 33 Ft-lbs. (45 NM).

Insert the seal tension spring (45) in to the seal sleeve (39).

GP8135 and GP8140 Pump Repair Instructions

Mounting Valve Casing:

Press seal cases (38) (with the stepped OD diameter 65mm) carefully to its stop in the centering holes of the intermediate casing (62). Mount flat leakage seal (62D).

Important! The flat leakage seal (62D) must be positioned with its 3mm diameter bore onto the notched pin (62C) on the intermediate casing (62). The leakage return bores in the intermediate casing and in the seal sleeves must remain clear of the cutouts in the seal (62D). Push inlet valve casing (50) together with intermediate casing carefully on to the centering studs (50A). Tighten hexagon nuts (49A) evenly and crosswise to 266 Ft-lbs. (360 NM).

Important! The torque tension on the screws (49A) must be checked after 8-10 operating hours; the pump must be at zero pressure. Thereafter the tension is to be checked every 200 operating hours.

To Dismantle Reduction Gear

As described above, take out plungers (36) and seal sleeves (39). Drain oil by removing plug (12). After removing the clip ring (33B), pry out the seal retainer (33) with a screwdriver. Open hose adapter (K11). Remove gear cover (K3) and remove the cooling vane plate (K1) by removing the screws (K4). Remove connecting rod screws (24).

Important! Connecting rods (24) are marked for identification. Do not twist connecing rod halves or interchange them. When reassembling, the connecting rods must be fitted in their exact original position on the crankshaft journals. Push connecting rod halves together with the crosshead as far as possible into the crosshead guide. Remove bearing cover (14), remove shims (21A/B/C).

To Dismantle Reduction Gear

Remove screws (67). Press off gear cover (66) by screwing two screws into both thread bores. Remove screw (72) and take off fitting disc (75A). Remove the gearwheel set (69) from the crankshaft (22) with a bearing puller tool. Using a rubber hammer, tap out the crankshaft towards bearing cover (14). Check surfaces on the connecting rods (24), crankshaft (22), and crossheads (25). Check the surfaces of the crosshead guides in the crankcase for any unevenness.

Reassemble in reverse order. Thread the crankshaft in from the bearing cover side until the bearing rests cleanly in the outer ring on flange (19).
Press in the outer ring from bearing (20) and use shims (21A/B/C), adjust the bearing to be free of play. To achieve this, add shims, screw on cover (14) and turn the crankshaft until it can no longer be turned by hand. Then remove a shim and establish whether the crankshaft (22) can now be turned. A crankshaft that can be too easily turned may cause damage to the bearings and connecting rods due to axial movements in the conical bearing shells. Mount connecting rod halves in their exact original position and tighten at 37 Ft.-Lbs. (50 NM).

Important! Connecting rods must be able to move slightly sideways on the stroke journals.

To Mount Reduction Gear

Before pressing the ball bearings (75 and 74) onto the pinion, heat them up. Press the gearwheel set (69) slightly on to the crankshaft so that the pinion together with the bearing (74) can still be inserted.
Move the pinion against the gearwheel set and make them mate perfectly when mounting. Then carefully tap the gearwheel set and the pinion simultaneously on to the crankshaft (22) and into the bearing seat.
Fit fitting disc (75A), and secure screw (72) with Loctite. Fit the seal (76) on to the cylindrical pins (68). Carefully push the gear cover (66) onto the bearing (75). Make sure that the radial shaft seal (73) does not become damaged during fitting on to the pinion shaft.

With their respective seals (K2), mount cooling plate (K1) and gear cover (K3). When assembling the cooling circuit line, make sure that the oil cooler connection (K7) is always joined to the upper connection (K3) of the gear cover.

Important! Before putting in to operation again, turn the reduction gear shaft per hand at least four full turns to make sure the gear is correctly aligned.

GP8135 and GP8140 Pump Dimensions- Inches (MM)

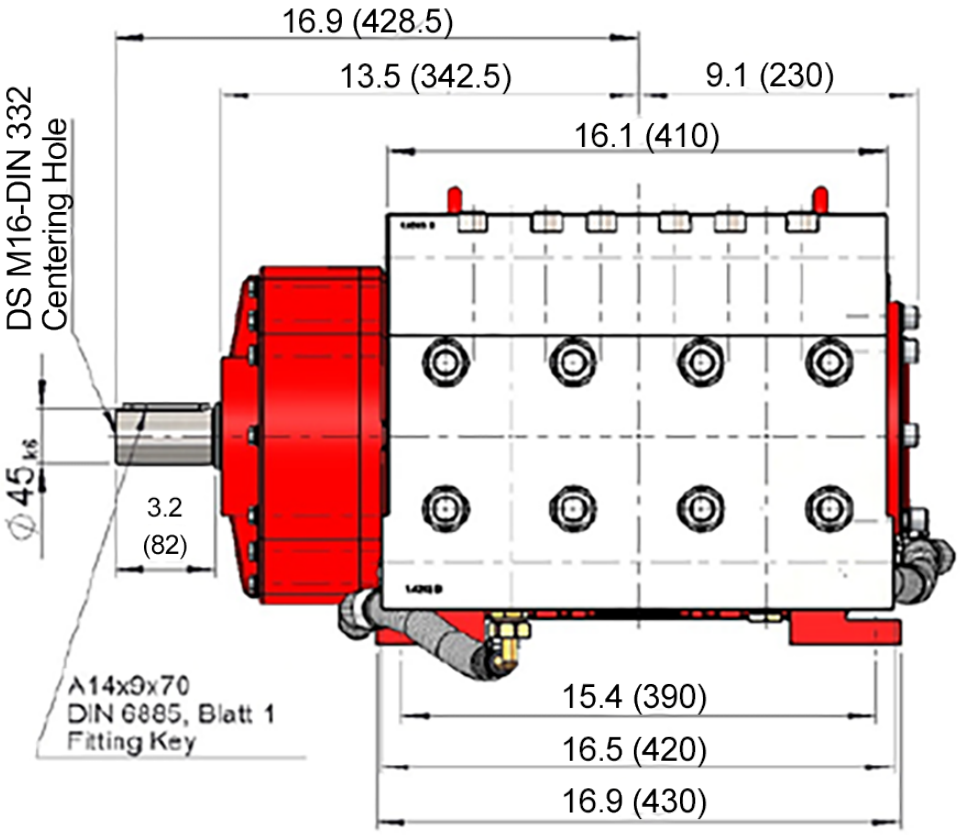

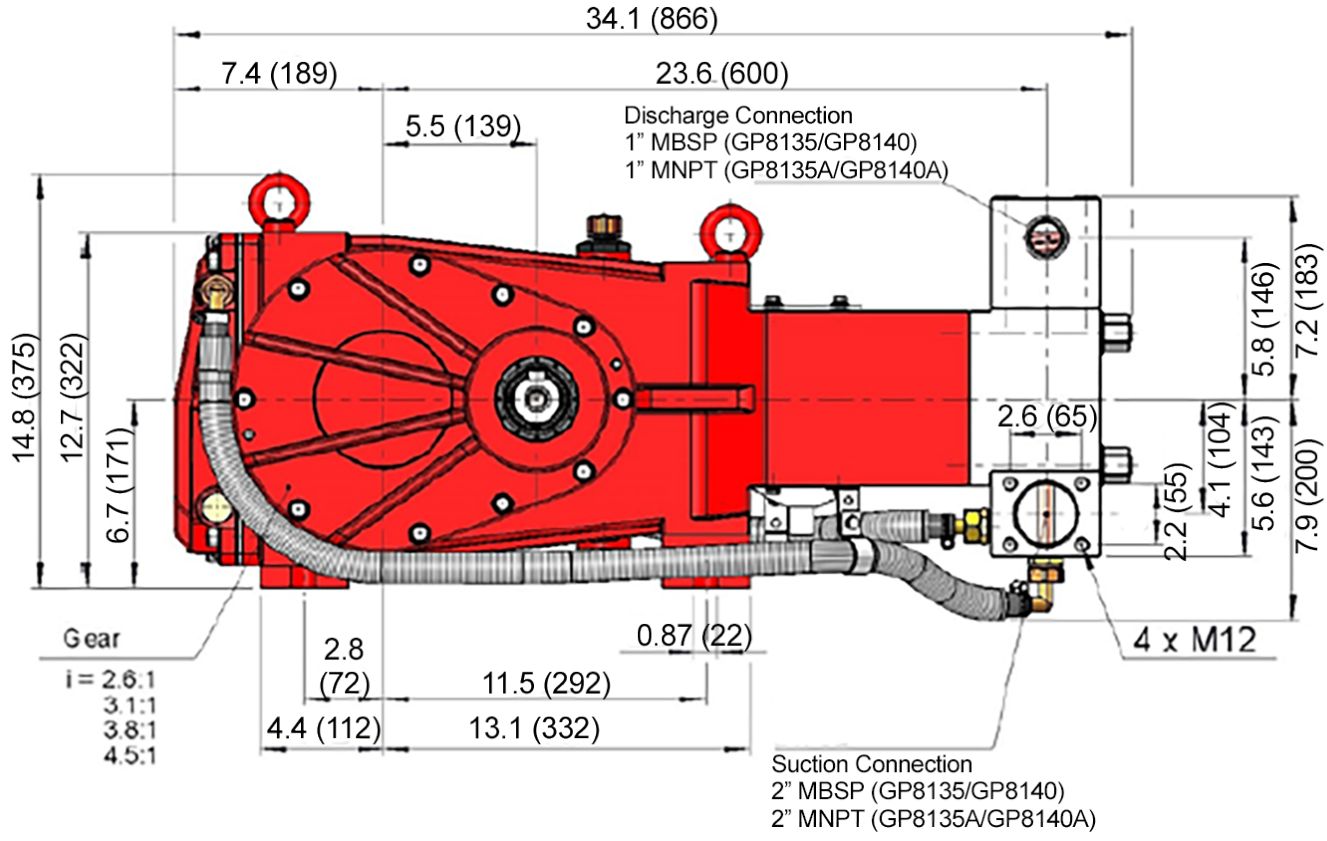

GIANT INDUSTRIES LIMITED WARRANTY

Giant Industries, Inc. pumps and accessories are warranted by the manufacturer to be free from defects in workmanship and material as follows:

1. Five (5) years from the date of shipment for all pumps used in portable pressure washers with NON-SALINE, clean water applications.
2. Two (2) years from the date of shipment for Giant pumps used in car wash applications.
3. One (1) year from the date of shipment for all other Giant industrial and consumer pumps.
4. Six (6) months from the date of shipment for all rebuilt pumps
5. Ninety (90) days from the date of shipment for all Giant accessories.

This warranty is limited to repair or replacement of pumps and accessories of which the manufacturer's evaluation shows were defective at the time of shipment by the manufacturer. The following items are NOT covered or will void the warranty:

1. Defects caused by negligence or fault of the buyer or third party.
2. Normal wear and tear to standard wear parts.
3. Use of repair parts other than those manufactured or authorized by Giant.
4. Improper use of the product as a component part.
5. Changes or modifications made by the customer or third party.
6. The operation of pumps and or accessories exceeding the specifications set forth in the Operations Manuals provided by Giant Industries, Inc.

Liability under this warranty is on all non-wear parts and limited to the replacement or repair of those products returned freight prepaid to Giant Industries which are deemed to be defective due to workmanship or failure of material. A Returned Goods Authorization (R.G.A.) number and completed warranty evaluation form is required prior to the return to Giant Industries of all products under warranty consideration. Call (419)-531-4600 or fax (419)-531-6836 to obtain an R.G.A. number.

Repair or replacement of defective products as provided is the sole and exclusive remedy provided hereunder and the MANUFACTURER SHALL NOT BE LIABLE FOR FURTHER LOSS, DAMAGES, OR EXPENSES, INCLUDING INCIDENTAL AND CONSEQUENTIAL DAMAGES DIRECTLY OR INDIRECTLY ARISING FROM THE SALE OR USE OF THIS PRODUCT.

THE LIMITED WARRANTY SET FORTH HEREIN IS IN LIEU OF ALL OTHER WARRANTIES OR REPRESENTATION, EXPRESS OR IMPLIED, INCLUDING WITHOUT LIMITATION ANY WARRANTIES OR MERCHANTABILITY OR FITNESS FOR A PARTICULAR PURPOSE AND ALL SUCH WARRANTIES ARE HEREBY DISCLAIMED AND EXCLUDED BY THE MANUFACTURER.

WARNING: This product might contain a chemical known to the State of California to cause cancer, and birth defects or other reproductive harm.
For more information go to www.P65Warnings.ca.gov

GIANT INDUSTRIES, INC., 900 N. Westwood Ave., P.O. Box 3187, Toledo, Ohio 43607
PHONE (419) 531-4600, FAX (419) 531-6836, www.giantpumps.com
© Copyright 2023 Giant Industries, Inc.

Performance Under Pressure

12/23 GP8135_GP8140.INDD