Model GP7122

Triplex Ceramic Plunger Pump Operating Instructions/ Repair and Service Manual

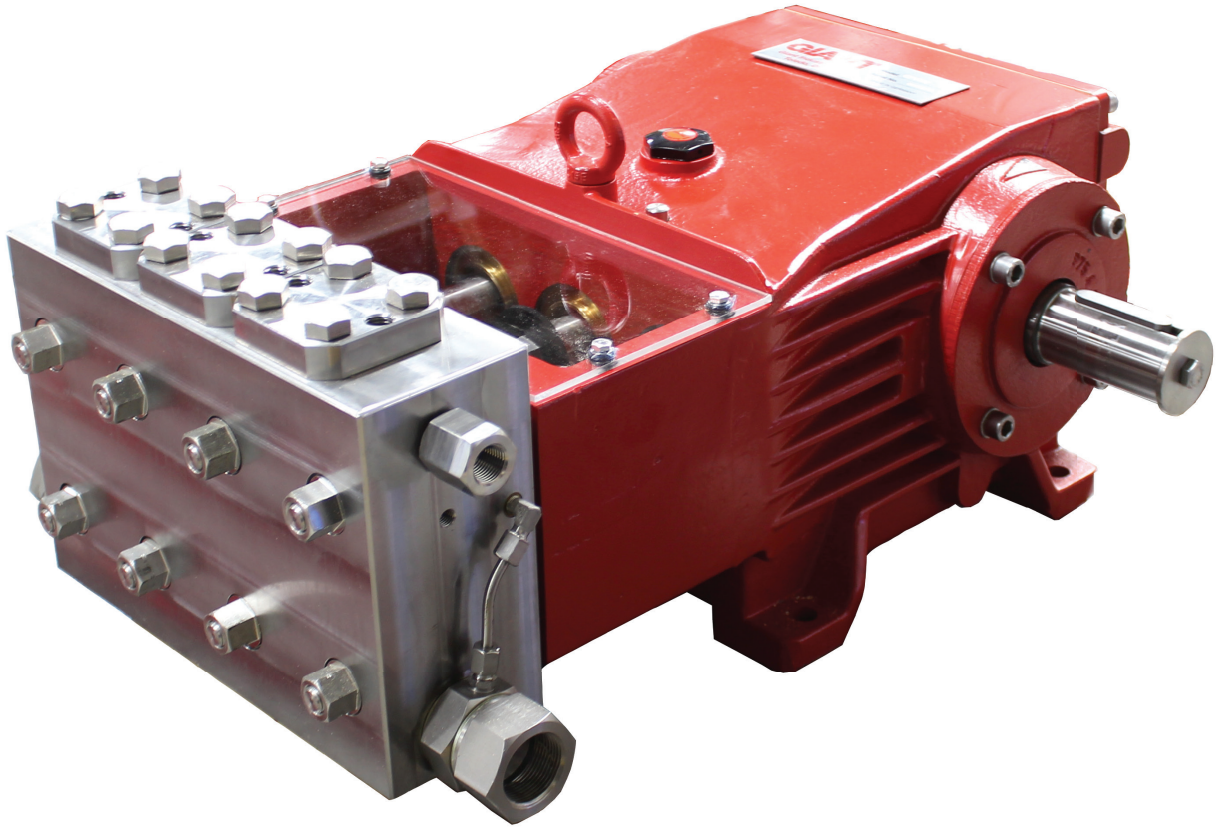

GIANT
Performance Under Pressure

Updated 05/23

Contents:

Pump Specifications:	page 2
Installation Instructions:	page 3
Repair Instructions:	page 4
Exploded View:	page 5
Parts List:	page 6
Kits:	page 7
Torque Specifications:	page 7
Dimensions:	back page
Warranty Information:	back page

GP7122

1. Performance

	U.S.	Metric
Maximum Volume	9.9 GPM	37.4 L/min
Maximum Discharge Pressure	10,300 PSI	710 Bar
Speed		750 RPM
Power Consumption	70.0 HP	52.2 kW
Inlet Pressure	-4.35 to 145 PSI[1]	-0.3 to 10 Bar[1]
Plunger Diameter	0.87”	22mm
Plunger Stroke	2.05”	52mm
Crankshaft Diameter		48mm
Key Width		14mm
Crankshaft Mounting		Either side
Shaft Rotation		Top of pulley towards manifold
Temperature of Pumped Fluids	Up to 140 °F	60° C
Inlet Ports		(2) 1 1/4” NPT
Discharge Ports		(2) 3/4” NPT
Weight	454 lbs.	296 kg
Crankcase Oil Capacity	1.7 Gal.	6.5 L
Fluid End Material		Stainless Steel
Volumetric Efficiency @ 750 RPM		89%
Mechanical Efficiency @ 750 RPM		83%
NPSHR	29.5 ft. of head	9.0 m of head

[1]Positive inlet pressures are required!

1) Figures given for maximum pressure and maximum speed (rpm) apply to intermittent operation with cold water. When the pump is used in continuous operation and/or with water warmer than 100 °F (40°C), these values must be reduced by 10%.
Performance data for intermittent operation, data for continuous operation on request. For information on intermittent operation and calculating of the performance data, see the Giant Industries assembly instructions.

NPSHR / Inlet pressure
Required NPSH refers to water at 68 °F (20 °C) at maximum permissible pump speed.
The inlet pressure on the suction side must not exceed 29 PSI (2 bar).

Level of noise emission
Emission sound pressure level: ≤ 93 dB(A)

2. Fields of application
The fields of application of these pump types correspond to the specifications in the assembly instructions GIANT INDUSTRIES.

Ambient conditions
Ambient temperature: 36 °F (2 °C) < $T_{Amb.}$ < 86 °F (30 °C)

4. Oil filling
- Filling quantity: **1.7 gal (6.5 L)**
- Quality: Industrial gear oil **ISO VG 220** or automotive gear oil **SAE 90 GL4 - Giant’s p/n 01154**
- Intervals: first oil change after **50 operating hours** then every **1000 operating hours**, but at the latest **12 months**

GP7122 HORSEPOWER REQUIREMENTS						
RPM	GPM	3000 PSI	5000 PSI	7000 PSI	9000 PSI	10,300 PSI
300	4.0	8.6	14.3	20.0	25.7	28.4
400	5.3	11.4	18.9	26.5	34.1	37.7
550	7.3	15.6	26.1	36.5	46.9	51.9
600	7.9	16.9	28.2	39.5	50.8	56.1
650	8.6	18.4	30.7	43.0	55.3	61.1
700	9.2	19.7	32.9	46.0	59.1	65.4
750	9.9	21.2	35.4	49.5	63.6	70.3

6. Installation/Putting into Operation

6.1 Shaft protector
When the pump is in operation, the open shaft end must be covered up by shaft protector (21), the driven shaft side and coupling by a contact-protector and the plunger room by cover (30).

6.2 Direction of pump rotation
Set the direction of rotation of the drive unit according to the direction of rotation arrow on the crankcase.

6.3 Suction line filter
Recommended mesh size 50 µm

7. Operation
The maximum operating pressure can be used in the speed range of 750 RPM. When reducing the speed, the pump pressure must be reduced in the same proportion to ensure sufficient gearbox lubrication.

7.1 Discharge Line
The pump comes with two special conical seals (50D) which have to be inserted in to the discharge ports of the pump. One of the two ports is to be closed with the included plug (50E).

To install the pressure line, the connection nipple (50C) with the external thread 1/2”-14 FNPT must be used. This together with the sealing cone (50D) seals the pressure line.

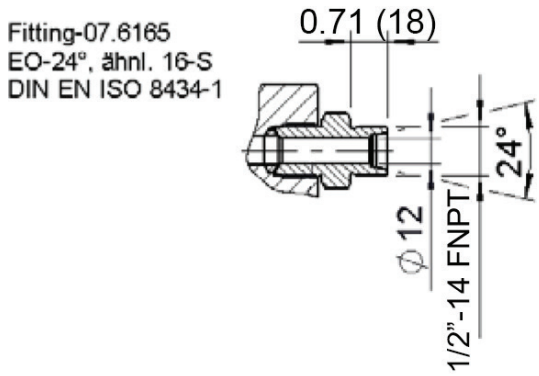

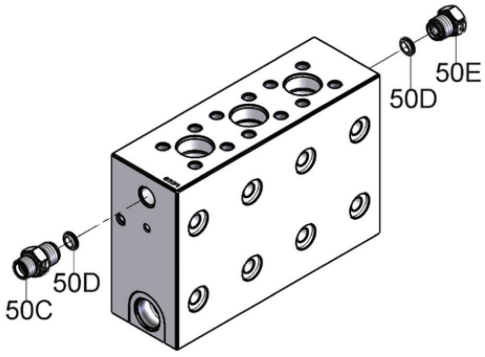

Hydraulic System Set-Up

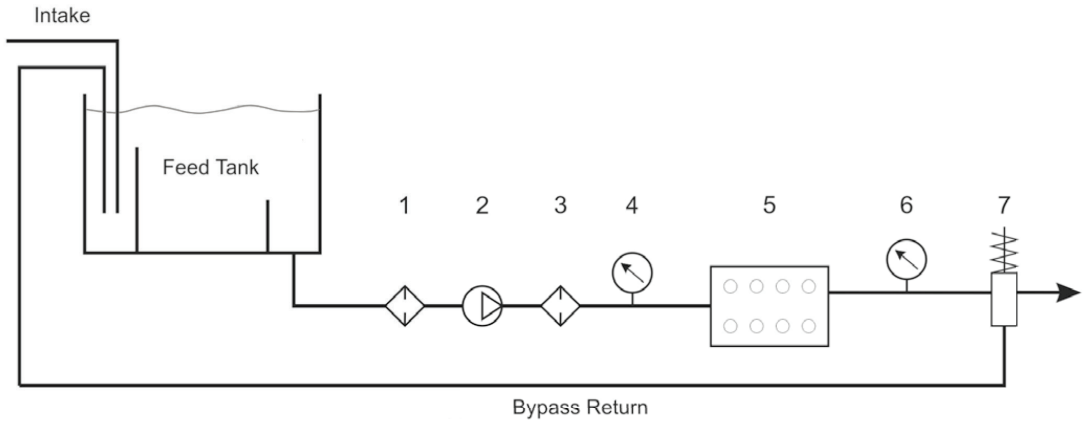

1 = Coarse filter
2 = Booster pump
3 = Fine-particle filter
4 = Gauge to check input pressure
5 = High pressure pump
6 = High pressure gauge
7 = Excess, Safety valve

Exploded View - GP7122

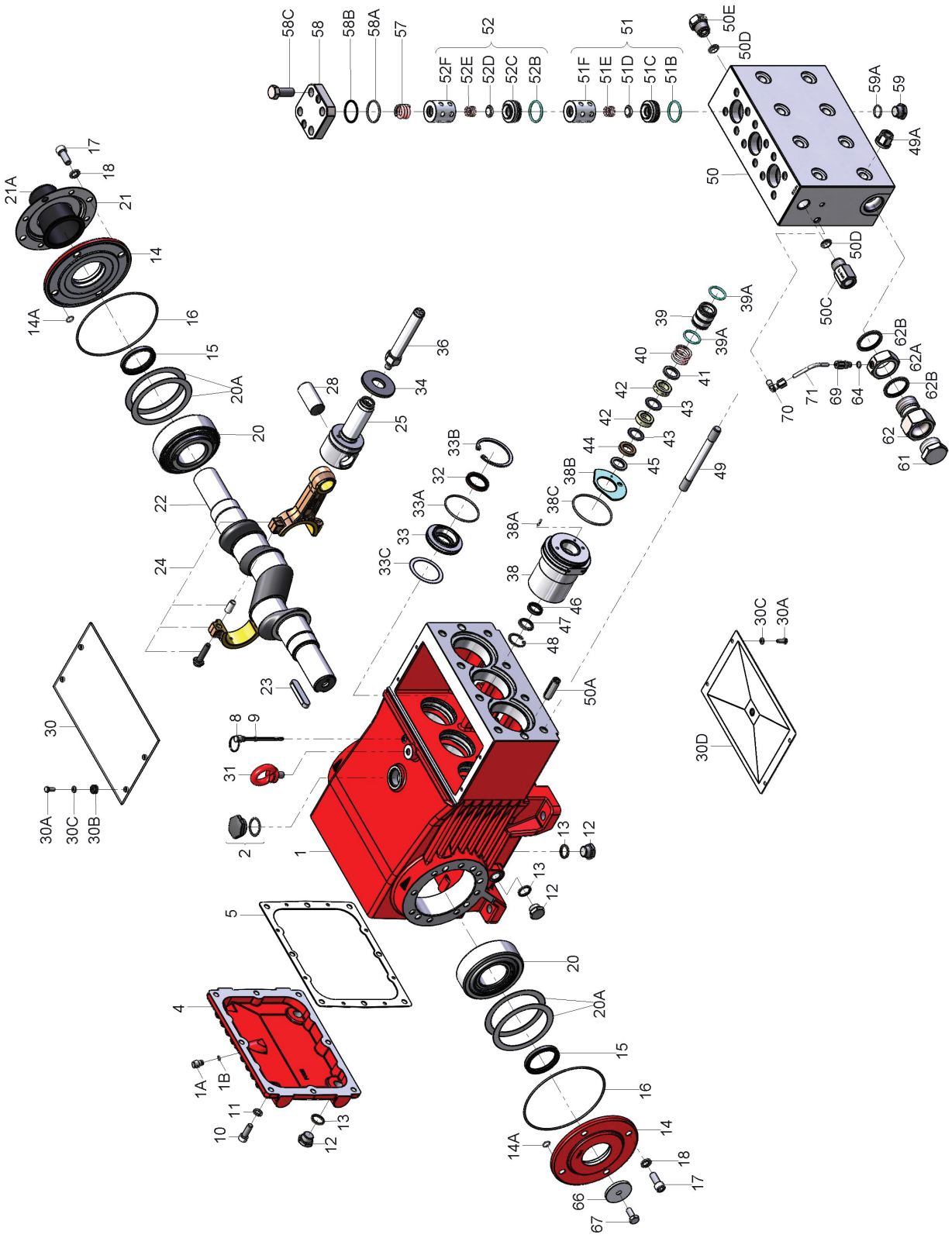

GP7122 PARTS LIST

ITEM	PART	DESCRIPTION	QTY.
1	05769	Crankcase	1
1A	05525	Head for Oil Dipstick	1
1B	01009	O-Ring	1
2	13000	Oil Filler Plug Assembly	1
4	07601	Crankcase Cover	1
5	05798	Seal for Crankcase Cover	1
8	07603	Oil Dip Stick Assembly	1
9	01009	O-Ring, Dip Stick	1
10	22706	Hexagon Screw	8
11	06725	Spring Washer	8
12	07109-0400	Drain Plug	6
13	06272	Copper Seal Ring, 1/2”	6
14	05770	Bearing Cover	2
14A	12204	O-Ring	8
15	05771	Radial Shaft Seal	2
16	05772	O-Ring for Bearing Cover	2
17	05642	Hexagon Socket Screw	8
18	05039	Spring Washer	8
20	05773	Taper Roller Bearing	2
20A	07611	Shim, 0.1 mm	1-8
21	05645	Shaft Guard Holder	1
21A	05646	Shaft Guard	1
22	05775	Crankshaft	1
23	07614	Key	1
24	05777	Connecting Rod Assembly	3
25	05778	Crosshead Assembly	3
28	05779	Crosshead Pin	3
30	07619	Cover Plate	1
30A	07225-0100	Hexagon Screw	8
30B	13136	Grommet	4
30C	08280	Disc	8
30D	13154	Cover	1
31	07623	Eye Bolt	1
32	07624	Radial Shaft Seal	3
33	06950	Seal Retainer	3
33A	07627	O-Ring for Seal Retainer	3
33B	06951	Circlip for Seal Retainer	3
33C	07249	Fitting Disc	3
34	13137	Oil Scraper (Flinger)	3
36	06748	Plunger	3
38	06749	Seal Sleave	3
38A	22764	Serrated Pin	3
38B	06750	Leakage Gasket	3
38C	06667	O-Ring	3
39	05522	Seal Case	3
39A	05523	O-Ring	6
40	07338	Tension Spring	3
41	06753	Support Disc	3
42	06754	Spiral Ring (Packing)	6
43	06755	Support Ring	6
44	06756	Guide Ring	3
45	06757	Pressure Ring	3

ITEM	PART	DESCRIPTION	QTY.
46	13390	Seal Ring	3
47	06758	Spacer Disc	3
48	05524	Circlip	3
49	13159	Stud Bolt	8
49A	13160	Hexagon Nut	8
50*	06759-NPT	Valve Casing Assembly (51B-F)	1
50A	13162	Centering Stud	2
50C	03397	Connection Nipple, 1/2” FNPT	1
50D	03398	Lens Gasket	2
50E	03399	Plug, 3/4” BSP	1
51	05780	Inlet Valve Assembly (51B-F)	3
51B	05193	O-Ring	3
51C	05194	Inlet Valve Seat	3
51D	06761	Valve Plate	3
51E	06762	Valve Spring	3
51F	06763	Spacer Pipe	3
52	05781	Discharge Valve Assembly (52B-F)	3
52B	05193	O-Ring	3
52C	05195	Discharge Valve Seat	3
52D	06761	Valve Plate	3
52E	06762	Valve Spring	3
52F	06763	Spacer Sleeve	3
57	06078	Tension Spring	3
58	07699	Plug	3
58A	07700	O-Ring	3
58B	07693	Support Ring	3
58C	07702	Hexagon Screw	12
59	07109-0400	Plug	3
59A	06807	Copper Ring (Gasket)	3
61	12251	Plug 1-1/4” NPT	1
62	03401	Connection Joint	2
62A	06766	Connecting Ring	2
62B	06767	Seal Ring	4
64	07204-0100	Steel Ring	2
66	13362	Disc for Crankshaft	1
67	13358	Hexagon Screw	1
69	06588	Screw-in Connector	2
70	06768	Threaded Elbow	2
71	06769	Curved Leakage Pipe	2
	07662	Valve Tool (not shown)	1
	17212	Crankcase Assembly (2x12/1-34/49/49A/50A/66/67)	
	17407-NPT	Pump Head Assembly (50-71 w/out 50A/66/67)	
	17262	Plunger Conversion Kit (36-48)	

*If the valve casing (50) needs to be replaced, items 50C-E will be included.

GP7122 REPAIR KITS

Plunger Packing Kit #09701

Item	Part #	Description	Qty.
38B	06750	Leakage Gasket	3
38C	06667	O-Ring	3
39A	05523	O-Ring	6
42	06754	Spiral Ring (Packing)	6
43	06755	Support Ring	6
44	06756	Guide Ring	3
46	13390	Seal Ring	3

Oil Seal Kit #09221

Item	Part #	Description	Qty.
32	07624	Radial Shaft Seal	3
33A	07627	O-Ring	3

Inlet Valve Assembly Kit #09702

Item	Part #	Description	Qty.
51B	05193	O-Ring	3
51C	05194	Inlet Valve Seat	3
51D	06761	Valve Plate	3
51E	06762	Valve Spring	3
58A	07770	O-Ring	3
58B	07693	Support Ring	3

Discharge Valve Assembly Kit #09703

Item	Part #	Description	Qty.
52B	05193	O-Ring	3
52C	05195	Discharge Valve Seat	3
52D	06761	Valve Plate	3
52E	06762	Valve Spring	3
58A	07770	O-Ring	3
58B	07693	Support Ring	3

GP7122 TORQUE SPECIFICATIONS

Position	Item #	Thread	Description	Lubricaion Info	Torque Amount
1	05769		Crankcase	Molycote Cu-Paste	
5	05798		Seal for Crankcase Cover	Loctite 5910	
10	22706	M10	Hexagon Screw		33 ft.-lbs. (45 Nm)
12	07109-0400	1/2” BSP	Drain Plug		59 ft.-lbs. (80 Nm)
15	05771		Radial Shaft Seal	Loctite 403	
17	05624	M12	Hexagon Socket Screw		64 ft.-lbs. (87 Nm)
24	05777	M10	Connecting Rod Assembly		30 ft.-lbs. (40 Nm)
30A	07225-0100		Hexagon Screw		89 in.-lbs. (10 Nm)
32	07624		Radial Shaft Seal	Loctite 403	
36	06748		Plunger	Loctite 243	33 ft.-lbs. (45 Nm)
38	06749		Seal Sleeve	Molycote Cu-Paste Crankcase Side	
49	13159		Stud Bolt	Loctite 648 Crankcase side	
49A	13160	M16	Hexagon Nut		133 ft.-lbs. (180 Nm)
58C	07702	M16	Hexagon Screw	Pro Pack 550	155 ft.-lbs. (210 Nm)

8. Maintenance and Servicing

Based on the thread type and the required tightening torques, observe the table on page 6.

8.1 Special tools required

The following special tools are required for assembly:
- Extraction tool (part number 07662)
- Pull-out tool size 2
- Snap-ring tongs

8.2 Suction and Discharge Valves

Loosen screws (58C).
Take plugs (58) out of valve casing with two screws.
Take out tension spring (57) and complete valve (51, 52) using either tool (07662) or stud bolt (size M16).
Valve seats (51C and 52C) are pressed out of spacer pipe (51F, 52F) by hitting the valve plate (51D, 52D) with a bolt.
Check surfaces of valve plate, valve seat, O-rings (51B, 58A) and support ring (58B) for damage.
Replace worn parts.

When reassembling:
The suction valve seat (51C) is 1 mm smaller in diameter than the discharge valve seat (52C). Suction valve seats are marked “S” and always have to be installed first.
Discharge valve seats are marked “P” and are always to be installed on top of suction valve.
Plugs (58) are to be tensioned down evenly with screws (58C) and crosswise to the required torque.

8.3 Seals and Plunger

Remove nuts (49A) and pull off pump head.
Take off cover plate (30).
Using a size 27 open-end wrench, separate plunger (36) from crosshead (25).

Don’t loosen the 3 plungers (36) before the valve casing has been removed.
Otherwise the plunger (36) could hit against the spacer pipe (51F) when the pump is being turned.

Remove seal sleeve (38) together with the plunger (36) from the crankcase guides (use ring groove as an aid).
Take seal case (39) out of seal sleeve (38).
Remove plunger (36) from seal sleeve.

Take pressure spring (40), support disc (41), seal unit (42/43/44) and pressure ring (45) out of the seal sleeve.
Remove leakage gasket (38B) from serrated pin (38A) on the seal sleeve (38).

Take-off circlip (48) using a clipring pliers, pull out spacer disc (47) and seal ring (46).
Lever grooved seal (46) out of the seal sleeve (38).

Check plunger surface (36), seal unit (42/43/44), leakage gasket (38B) and seal ring (46).
Check O-rings (38C/39A) on the seal case (39)/ seal sleeve (38).
Replace worn seals.

The Ø3.2mm bore of the leakage gasket (38B) must be inserted directly on to the serrated pin (38A) of the seal sleeve (38A).
The leakage gasket (38B) must be fitted to the seal sleeve (38) so that the bevelled surface of the gasket (38B) faces outwards.

When exchanging worn plunger, attention must be paid that the centre bore and front surface of the crosshead (25) are free of dirt and damage.
Thread new plunger carefully through oiled seals in seal sleeve.
Coat thread of new plunger lightly with suitable bonding agent.
Then insert seal sleeve with plunger into crankcase guide. Drive Crankshaft until plunger with crosshead (25) pushes against plunger (36).
Tighten plunger (36) to the required torque using a size 27 torque wrench.

Mounting Valve Casing:
Clean surfaces of seal sleeves (38) in gear box and sealing surfaces of valve casing.
Push valve casing carefully onto O-rings of seal case and centring studs (50A).
Tighten nuts (49A) to the required torque.

If required, supplementary assembly instructions can be requested from Giant Industries.

Dimensions - GP7122 - Inches (mm)

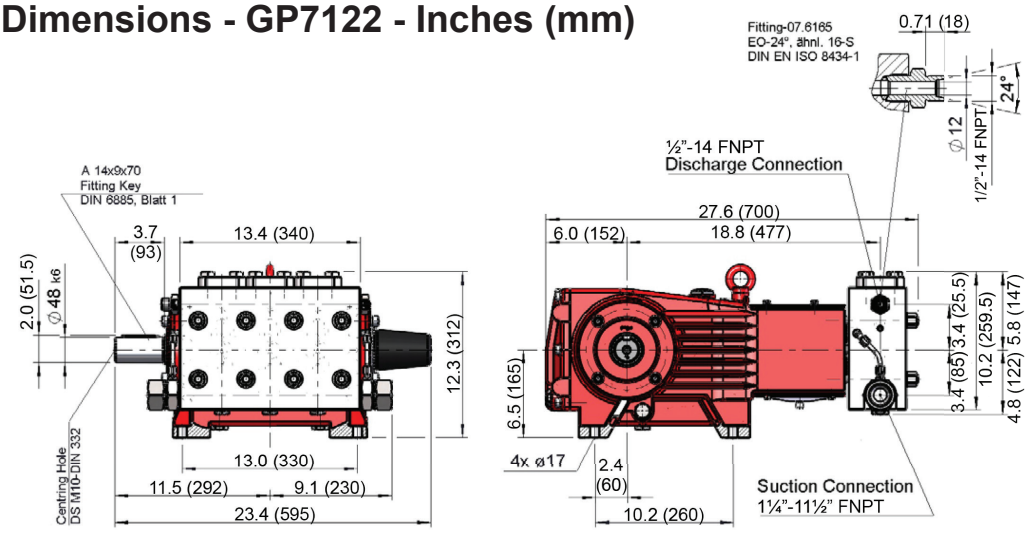

GIANT INDUSTRIES LIMITED WARRANTY

Giant Industries, Inc. pumps and accessories are warranted by the manufacturer to be free from defects in workmanship and material as follows:

1. Five (5) years from the date of shipment for all pumps used in portable pressure washers with NON-SALINE, clean water applications.
2. Two (2) years from the date of shipment for Giant pumps used in car wash applications.
3. One (1) year from the date of shipment for all other Giant industrial and consumer pumps.
4. Six (6) months from the date of shipment for all rebuilt pumps
5. Ninety (90) days from the date of shipment for all Giant accessories.

This warranty is limited to repair or replacement of pumps and accessories of which the manufacturer's evaluation shows were defective at the time of shipment by the manufacturer. The following items are NOT covered or will void the warranty:

1. Defects caused by negligence or fault of the buyer or third party.
2. Normal wear and tear to standard wear parts.
3. Use of repair parts other than those manufactured or authorized by Giant.
4. Improper use of the product as a component part.
5. Changes or modifications made by the customer or third party.
6. The operation of pumps and or accessories exceeding the specifications set forth in the Operations Manuals provided by Giant Industries, Inc.

Liability under this warranty is on all non-wear parts and limited to the replacement or repair of those products returned freight prepaid to Giant Industries which are deemed to be defective due to workmanship or failure of material. A Returned Goods Authorization (R.G.A.) number and completed warranty evaluation form is required prior to the return to Giant Industries of all products under warranty consideration. Call (419)-531-4600 or fax (419)-531-6836 to obtain an R.G.A. number.

Repair or replacement of defective products as provided is the sole and exclusive remedy provided hereunder and the MANUFACTURER SHALL NOT BE LIABLE FOR FURTHER LOSS, DAMAGES, OR EXPENSES, INCLUDING INCIDENTAL AND CONSEQUENTIAL DAMAGES DIRECTLY OR INDIRECTLY ARISING FROM THE SALE OR USE OF THIS PRODUCT.

THE LIMITED WARRANTY SET FORTH HEREIN IS IN LIEU OF ALL OTHER WARRANTIES OR REPRESENTATION, EXPRESS OR IMPLIED, INCLUDING WITHOUT LIMITATION ANY WARRANTIES OR MERCHANTABILITY OR FITNESS FOR A PARTICULAR PURPOSE AND ALL SUCH WARRANTIES ARE HEREBY DISCLAIMED AND EXCLUDED BY THE MANUFACTURER.

WARNING: This product might contain a chemical known to the State of California to cause cancer, and birth defects or other reproductive harm.
For more information go to www.P65Warnings.ca.gov

GIANT INDUSTRIES, INC. 900 N. Westwood Ave., Toledo, Ohio 43607
Phone: (419)-531-4600 FAX (419)-531-6836, www.giantpumps.com
© Copyright 2023 Giant Industries, Inc.

Performance Under Pressure